WALL MOUNT BRACKET FOR PTZ CAMERA

ENB-BTPW66

FEATURES

- Aluminium Alloy
- Max. Load Support up to 20 kg
- Wall Mount Bracket for PTZ Camera
- IP66

SPECIFICATION

MODEL	**Model No.**	**ENB-BTPW66**
	Type	WALL MOUNT BRACKET FOR PTZ CAMERA
GENERAL	Construction	Aluminium Alloy
	Color	White
	Max. Weight Supported	20 Kg
	Dimensions(LxWxH)	258x109x163 mm
	Weight	0.56 Kg

Dimension Unit : mm

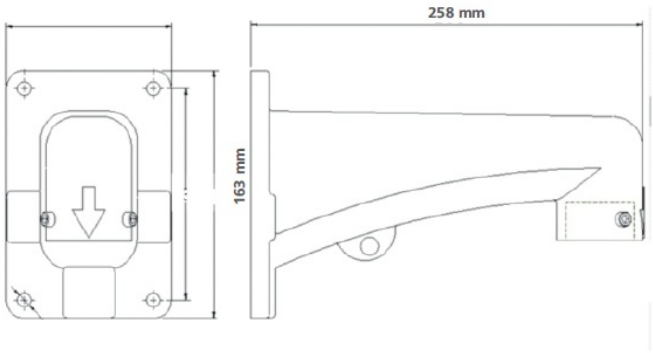

ORDERING INFORMATION

Part Number	Description	Standard Quantity
ENB-BTPW66	Eyenor Wall Mount Bracket for PTZ Camera	1

PACKING INFORMATION

Part Number	Packing Mode	Gross weight(Kg)	Dimension(mm)
ENB-BTPW66	Carton Box	0.63	177x124x284

★Product specification and availability are subject to change without notice.