IP THERMAL BULLET CAMERA

NORDEN®

ENC-HBU5M-80R-35

FEATURES

- 400x300 Uncooled VOx Micro Bolometer Detector
- Sensitivity ≤40mK
- 8/15/25/35/50 mm Fixed Thermal Lens
- Areas / Spot / Line Temperature Measurement Rule Support
- 17 Color Patterns Support
- IP67

SPECIFICATION

MODEL	Model No.	ENC-HBU5M-80R-35
	Type	IP Thermal Bullet Camera
THERMAL CAMERA	Detector Type	Uncooled VOx Focal Plane Arrays
	Effective Pixels	400x300 and Image can be scaled up to 704×576
	Pixel Size	17um
	Thermal Sensitivity (NETD)	≤40 mK
	Spectral Range	8~14um
	Image Setting	Brightness, Sharpness, Contrast, 2D/3D DNR, Mirror / Flip, FFC
	Color Palettes	White & Black Hot, Ironbow, Rainbow etc. up to 17 modes
	Iris	Auto Fixed IRIS
THERMAL LENS	Lens	Fixed
	Digital Zoom	16x
	Focus Control	Auto Focus
	Focal Length	8/15/25/35/50 mm
	F No.	1.0
	Angle of View	8mm: 46.0°(H), 35.3°(V); 15mm: 25.5°(H), 19.2°(V); 25mm: 15.4°(H), 11.6°(V); 35mm: 11.0°(H), 9.0°(V); 50mm: 7.7°(H), 5.8°(V)

Thermal imaging**

Object	Human(1.8mx0.5m)					Vehicle(4.0mx1.5m)					Fire(1.0mx1.0m)				
Lens (mm)	8	15	25	35	50	8	15	25	35	50	8	15	25	35	50
Detection (m)	235	441	735	1029	1471	722	1353	2255	3137	4510	235	441	735	1029	1471
Recognition (m)	59	110	184	257	368	180	338	564	789	1127	78	147	245	343	490
Identification (m)	29	55	92	129	184	90	169	282	395	564	39	74	123	172	245

VISIBLE LENS	Image Sensor	1/2.8" CMOS
	Max.Resolution	1920 ×1080
	Focal Length	5 ~ 50mm
	Focus Control	Auto / Manual
	Shutter Speed	1s ~ 1/100,000s, Auto Manual
	Min. Illumination	Color: 0.1 lux @ F1.2, B/W: 0.01 lux
	AGC	Auto / Manual
	Angle of View(H)	50.85° ~ 7.67°
	Angle of View(V)	27.78° ~ 4.36°
	Angle of View(D)	57.9° ~ 8.8°
	Digital Zoom	16x
	Max.Aperture	F 2.0
	Digital Noise Reduction	2D / 3D DNR, Auto / Manual
	S/N Ratio	≥60 dB
	WDR	120dB
	Smart IR	Up to 80m (Upgradable to 100m)

★Product specification and availability are subject to change without notice.

IP THERMAL BULLET CAMERA

NORDEN®

ENC-HBU5M-80R-35

MODEL	Model No.	ENC-HBU5M-80R-35
	Type	IP Thermal Bullet Camera
VIDEO	Video Compression	Enhanced (H.265, H.264), H.265, H.264, MJPEG
	Frame Rate	Main Stream: Thermal: (704×576) @25/30fps; Visible: (1920×1080, 1280×720) @25/30fps Sub Stream: Thermal: (352×288) @25/30fps; Visible: (704×576, 640×480, 640×360, 352×288, 320×240) @25/30fps
	Bit Rate Control	CBR, VBR
	Bit Rate	Thermal : 10Kbps ~ 6Mbps, Visible : 100Kbps ~ 12Mbps
	DVE Image Enhance	Supported
	HLC	Supported
	BLC	Supported
	OSD	Supported
	OSD Type	Title, Week, Date, Time, Text with different colors and adaptable sizes (Small / Medium / Big), Image overlay
	ROI	Up to 8 regions
	Privacy Masking	Up to 4 regions
AUDIO	Audio Compression	G.711A, G.711U, RAW_PCM
	Audio Bitrate	8 kbps ~ 16kbps
	Two Way Audio	Supported
	Audio I/O	1/1
SMART	Behaviour Detection	Thermal / Visible : Intrusion (Perimeter), Crossline (Tripwire), Double Crossline (Double Tripwire)
	Intelligent Identification	Thermal / Visible : Loitering, Region Entry / Exit Detection, Smoke Detection, Flame Detection, Flame Point Detection, Smoker Detection
	Statistical Analysis	Thermal / Visible : People Counting, Wrong Way Detection, Human and Vehicle Detection, Temperature Detection
	Alarm Management	Motion Detection, Tampering Alarm, Disk Full Alarm, Temperature Alarm, Input / Output Alarm, Network Alarm
	Alarm Notification	E-mail, HTTP, FTP, & Alarm Out (Event Notification/ Recording/ Snapshot upload through E-mail, HTTP, FTP)
TEMPERATURE	Detection Mode	Spot, Line, Area (Total 20 Rules - 1 Full Screen and 19 others)
	Alarm	Over / Difference Alarm
	Accuracy	±2°C / ±2%
	Response Time	≤30ms
	Temperature measurement range	-20°C ~ 150°C
INTERFACE	Protocols	TCP/IP, UDP, IPv4, IPv6, ICMP, HTTP, HTTPS, FTP, DHCP, DNS, DDNS, RTP/RTCP, RTSP, PPPoE, NTP, UPnP, SMTP, SNTP, IGMP V2/V3, 802.1x, QoS, Unicast, Multicast, SNMP, ARP, SSL / TLS 1.2
	Security	AES Video Encryption, IP Filter, User Authentication (Multiple Privilege Level), HTTPS Authentication, Digest Authentication, User Access Log
	Compatibility	ONVIF (Profile S, T), CGI/SDK
	Network	1x RJ45 10M/100M Self Adaptive Ethernet Port
	Serial Interface	1xRS485
	Alarm I/O	2/2
	Heater	Supported
	Fan	Supported
	Max.User	32
	Client Application	EyeGuard

★Product specification and availability are subject to change without notice.

IP THERMAL BULLET CAMERA

NORDEN®

ENC-HBU5M-80R-35

MODEL	Model No.	ENC-HBU5M-100R-35
	Type	IP Thermal Bullet Camera
GENERAL	Power Supply	DC12V / AC24V, PoE
	Max. Power consumption	24W
	Working Temperature	-40 °C ~ 60 °C
	Working Humidity	≤95% RH
	Ingress Protection	IP67
	Vandal Resistant	IK10 (Housing)
	Surge Protection	TVS4000V
	Reset Button	Supported
	Dimensions	(244.8 ~ 274.8)×180.5×126.8 mm
	Weight	2.5Kg

Dimension Unit: mm

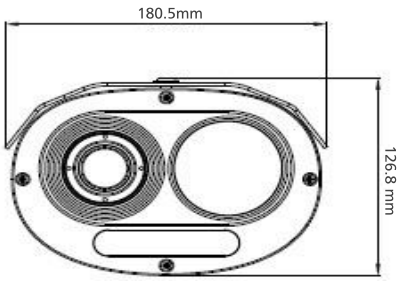

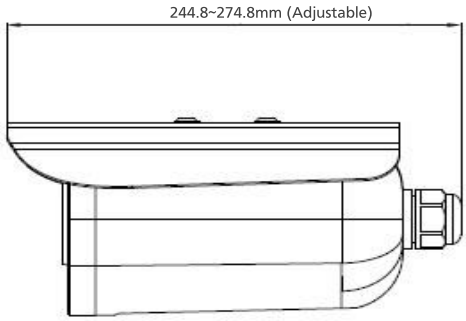

ORDERING INFORMATION

Part Number	Description	Standard Quantity
ENC-HBU5M-80R-35	2MP IP Dual Sensor Temperature Detection Thermal Bullet Camera with 400x300 Thermal Resolution, 8/15/25/35/50 mm Fixed Thermal lens, 5 to 50mm Motorized Visible lens, PoE+, and 80m (Upgradable to 100m) IR Support	1
ENB-BCUW66	Wall Mount Bracket for Eyenor Bullet Camera	1
ENB-BCUC66	Ceiling Bracket for Eyenor Bullet Camera	1

PACKING INFORMATION

Part Number	Packing Mode	Gross Weight (kg)	Dimension (mm)
ENC-HBU5M-80R-35	Carton Box	-	-

**The detection ranges may vary in different conditions. Product performance is based on testing in a controlled environment.
Results may vary due to several external and environmental factors.

★Product specification and availability are subject to change without notice.