5MP EXPLOSION PROOF THERMAL PTZ CAMERA

EYENOR®

ENC-HPT8Z-33X-23

FEATURES

- 304 / 316L Stainless Steel Construction
- 640×512/ 400x300 Thermal Resolution
- 33X Optical Zoom
- ONVIF Profile (S, G, T)
- Quad Stream
- Audio and Alarm Support
- Wiper Support
- ATEX/ IECEx/ CCoE (PESO) Certified
- IP68

SPECIFICATION

MODEL	**Model No.**	**ENC-HPT8Z-33X-23**											
	Type	5MP EXPLOSION PROOF THERMAL PTZ CAMERA											
THERMAL CAMERA	Detector Type	Uncooled VOx Focal Plane Arrays											
	Effective Pixels	640x512 and Image can be scaled up to 1280x1024 (Optional 400×300 and Image can be scaled up to 704×576)											
	Pixel Size	12um (640x512) (17um (400x300))											
	Thermal Sensitivity (NETD)	≤40 mK											
	Spectral Range	8~14um											
	Image Setting	Brightness, Sharpness, Contrast, Mirror, 3D DNR, Mirror / Flip, FFC											
	Color Palettes	White & Black Hot, Ironbow, Rainbow etc. up to 17 modes											
	Iris	Auto Fixed IRIS											
	DVE Image Enhance	Supported											
THERMAL LENS	Lens	Fixed											
	Focus Control	Motorized Focus											
	Focal Length	25/50/75/100 mm											
	Frame Rate	640x512 Main Stream: (1280×1024, 1280×720, 640×512) @ 25fps Sub Stream: (D1, CIF) @ 25fps (Optional 400x300) Main Stream: (704×576) @ 25/30fps Sub Stream: (CIF) @ 25/30fps)											
	Video Bit Rate	640x512: 100kbps ~ 8 Mbps 400x300 :10 kbps ~ 6 Mbps											
	F No.	1.0											
	Angle of View (640x512)	25mm	50mm	75mm	100mm								
		17.0°(H), 14.0°(V)	8.0°(H), 7.0°(V)	6.0°(H), 5.0°(V)	4.3°(H), 3.5°(V)								
	Thermal imaging	Object	Human(1.8mx0.5m)				Vehicle(4mx1.5m)				Fire(1mx1m)		
		Lens (mm)	25	50	75	100	25	50	75	100	25	50	75	100
		Detection(m)	1040	2081	3121	4161	3194	6389	9583	12778	1042	2083	3125	4167
		Recognition(m)	260	520	780	1040	799	1597	2396	3194	347	694	1042	1389
		Identification(m)	130	260	390	520	399	799	1198	1597	174	347	521	694

5MP EXPLOSION PROOF THERMAL PTZ CAMERA

EYENOR®

ENC-HPT8Z-33X-23

MODEL	**Model No.**	**ENC-HPT8Z-33X-23**
	Type	5MP EXPLOSION PROOF THERMAL PTZ CAMERA
THERMAL LENS	Angle of View (400x300)	25mm: 15.4°(H), 11.6°(V) 50mm: 7.7°(H), 5.8°(V) 75mm: 5.1°(H), 3.8°(V) 100mm: 3.8°(H), 2.3°(V)
	Thermal imaging	

Object	Human(1.8mx0.5m)				Vehicle(4mx1.5m)				Fire(1mx1m)			
Lens (mm)	25	50	75	100	25	50	75	100	25	50	75	100
Detection(m)	735	1471	2206	2941	2255	4510	6765	9020	735	1471	2206	2941
Recognition(m)	184	368	551	735	564	1127	1691	2255	245	490	735	980
Identification(m)	92	184	275	367	282	564	846	1127	123	245	368	490

VISIBLE CAMERA	Image Sensor	1/2.8" CMOS Progressive 5.0 MegaPixel
	Day / Night	IR Cut Filter with Auto Switch
	Lens Type	Motorized Lens
	Focal Length	4.7~155.1 mm (Optional 4.5 ~ 148.5mm)
	Focus	Auto / Semi Auto / Manual
	Iris Type	DC Auto Iris
	Angle of View (H)	55.0°~2.3° (Optional 60.7°~2.0°)
	Angle of View (V)	41.6°~1.7° (Optional 35.7°~1.1°)
	Aperture Range	F1.6 ~ F4.3
	Optical Zoom	33x
	Digital Zoom	16x
	Shutter	1s - 1/100,000s, Auto/Manual
	Min. Illumination	Color: 0.001 lux @ F1.6, 0 lux with IR
	AGC	Auto / Manual
	Digital Noise Reduction	2D & 3D DNR, Auto / Manual
	S/N Ratio	≥55 dB
	Defog	Smart Defog
	WDR	120 dB
VIDEO	Max. Resolution	2592×1944
	Video Compression	H.265+, H.265, H.264, MJPEG
	Frame Rate	Main Stream: (2592x1944) @ 25/30 fps, (1920x1080, 1280x720) @ 50/60fps Sub Stream: (1920x1080, 1280x720, D1) @ 25/30fps Third Stream: (VGA, CIF, QVGA, QCIF) @ 25/30fps Fourth Stream: (VGA, CIF, QVGA, QCIF) @ 25/30fps (Optional)
	Stream Settings	i-Frame, PAL/NTSC, Frame Rate, EIS, SVC
	Video Bit Rate	100 kbps ~ 12 Mbps
	Bitrate Type	CBR, VBR
	Image Settings	Brightness, Contrast, Saturation, Sharpness, Day/Night (Color, Mono, Auto), Flip/Mirror/Rotation, Multiple Scene & Profile Auto, Day/Night, Tungsten, Manual
	White Balance	Auto / Manual
	HLC	Supported
	BLC	Supported
	OSD	Supported
	ROI	Up to 8 regions
	Privacy Mask	Up to 4 regions
AUDIO	Audio Compression	G.711U, G.711A, RAW_PCM
	Audio I/O	1/1
	Audio Bit Rate	8 ~ 16 Kbps
SMART	Behavior Detection	Intrusion (Perimeter), Crossline (Tripwire), Loitering
	Statistical Analysis	People Counting, Wrong Way Detection, Human & Vehicle Detection, Fire Point Detection, Smoke Detection
	Alarm Management	Motion Detection, Tampering (Masking), Input & Output Event, Network Alarm, Disk Alarm, Day Night Switch Alarm, Abnormal Audio Alarm, Pre/Post Alarm Recording, Alarm Recording/Snapshot
	Alarm Notifications	E-mail, HTTP, FTP, SD Card & Alarm Out (Event Notification/ Recording/ Snapshot upload through E-mail, HTTP, FTP & SD Card)
	Auto Tracking	Supported **Will be available in next FW version
TEMPERATURE	Detection Mode	Spot, Line, Area
	Alarm	Over/Difference Alarm
	Accuracy	±2℃ / ±2%
	Response Time	≤30ms
	Measurement range	Up to 900 °C (±0.2°C accuracy up to 15M and ±15-20% accuracy up to 50M)
	Display mode	Temperature target > 5°C, Display absolute temperature value; Temperature target ≤ 5°C, Display relative temperature value (Temperature difference DEV = highest value - average)

5MP EXPLOSION PROOF THERMAL PTZ CAMERA

EYENOR®

ENC-HPT8Z-33X-23

MODEL	**Model No.**	**ENC-HPT8Z-33X-23**
	Type	5MP EXPLOSION PROOF THERMAL PTZ CAMERA
INTERFACE	Protocols	TCP/IP, UDP, IPv4, IPv6, ICMP, HTTP, HTTPS, FTP, DHCP, DNS, DDNS, RTP, RTSP, RTCP, PPPoE, NTP, UPnP, SMTP , IGMP, 802.1X, Unicast, Multicast, QoS, ARP, SNMP, Telnet, SSL/TLS1.2
	Security	TLS Video Encryption, IP Filter, User Authentication (Multiple Privilege Level), 802.1X Authentication (EAP-MD5), HTTPS Authentication, RTSP Authentication, Digest Authentication, User Access Log
	Compatibility	ONVIF (S, G, T) , SDK, CGI
	Network	1 x RJ45 10M/100M Self Adaptive Ethernet Port
	Alarm Interface	2 Input / 1 Output
	Serial Interface	1xRS485
	Edge Storage	SD card slot, up to 256 GB
	ANR	Supported
	Built-in Heater	Supported(Optional)
	Wiper	Supported
	Max. User	32
	Client Application	EyeGuard
PAN AND TILT	Pan Range	360°
	Pan Speed	Pan Manual Speed: 0.1°/s ~ 45°/s, Pan Preset Speed: 45°/s
	Tilt Range	-90 ~ +90°
	Tilt Speed	Tilt Manual Speed: 0.1°/s ~ 45°/s, Tilt Preset Speed: 45°/s
	Preset Accuracy	±0.1°
	Cruise Scan	Supported
	Keep watch	Supported
	Preset	300
	Resume function	Supported
	Auto Cruise	Supported
	Auto Scan	Supported
GENERAL	Power Supply	AC 220V / AC 24V / DC 24V / PoE++ (IEEE 802.3bt-Type 4)
	Power Consumption	Max. 70W (with thermostat)
	Working Temperature	-40℃ ~ 70℃
	Working Humidity	0-95% RH (non-condensing)
	Atmospheric pressure	80 kPa ~ 110 kPa
	Window glass	Strong tempered glass
	Sun shade	Supported
	Ingress Protection	IP68
	Vandal Resistant	IK10(Housing)
	Surge Protection	TVS6000V
	Reset Button	Supported
	Dimensions	508.2x301.5x400 mm
	Net Weight	38 kg

Dimension Unit : mm

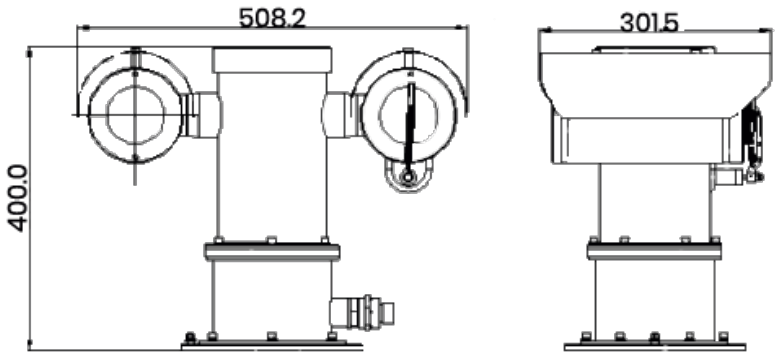

5MP EXPLOSION PROOF THERMAL PTZ CAMERA

ENC-HPT8Z-33X-23

MODEL		
	Model No.	**ENC-HPT8Z-33X-23**
	Type	5MP EXPLOSION PROOF THERMAL PTZ CAMERA

ORDERING INFORMATION

Part Number	Description	Standard Quantity
ENC-HPT8Z-33X-23	5MP SS316L (optional SS304) Explosion-proof IP Thermal PTZ camera with 640*512 (400*300 Optional) Thermal Resolution, 25mm (optional 50, 75, 100mm) Motorized Focus Thermal Lens , 33X Visible Optical Zoom, Wiper and SD card slot Support	1
ENB-BZPW68	Wall Mount Bracket for Eyenor Explosion / Corrosion Proof PTZ Camera	1
ENB-BZPH68	Corner Mount Bracket for Eyenor Explosion / Corrosion Proof PTZ Camera	1
ENB-BZPV68	Pole Mount Bracket for Eyenor Explosion / Corrosion Proof PTZ Camera	1
ENA-EXH010	1 Meter Explosion / Corrosion Proof Hose for Eyenor Explosion / Corrosion Proof Camera	1
ENA-EXH015	1.5 Meter Explosion / Corrosion Proof Hose for Eyenor Explosion / Corrosion Proof Camera	1
ENA-EXH020	2 Meter Explosion / Corrosion Proof Hose for Eyenor Explosion / Corrosion Proof Camera	1

PACKING INFORMATION

Part Number	Packing Mode	Gross weight(Kg)	Dimension(mm)
ENC-HPT8Z-33X-23	Carton Box	-	-