U bracket for 280Kg Lock

A U bracket is an accessory used to mount electromagnetic locks for access control door security. U bracket comprise of 2 parts and it is used to mount 280Kg Electromagnetic lock and it's armature plate on the inward door.

Application

Used to hold the Electromagnetic locks for the access control doors. It is specially designed and fabricated to hold the weight of the magnetics locks. It can commonly used for Office areas, schools, communities, office buildings, hotels, shopping malls, shops, public service places, etc.

Features

- Works with 280Kg Magnetic lock
- Downside frameless glass door U bracket

Technical Parameters

Material Selection	High Strength Aluminum, Sandblast Finished
Suitable for Door	In-swing Door
Opening Mode	90° Degrees Door
Finished for Shell	Anodized aluminium

Dimensions:

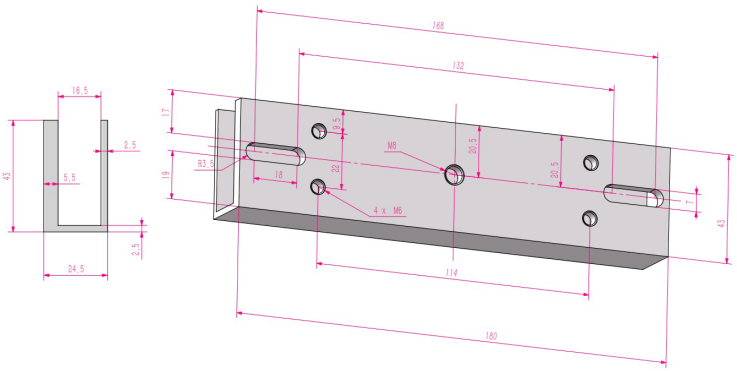

Ordering Information

Part Number	Description
NAC-6015UB	U bracket for 280Kg Lock